SPECIFICATION

Product Name: TDLAS CH4 Sensor

Item No.: Gasboard-2502

Version: V0.4

Date: October 26, 2023

Revision

No.	Version	Content	Date
1	V0.1	Preliminary version	2022.11.02
2	V0.2	Updated: 1. accuracy improved to 5 ppm + 2%reading and resolution improved to 0.1 ppm 2. Device ID range changed to 0x01 ~ 0x84 3. Working current changed from 50mA to 100mA 4. Dimension changed from 70*74*278mm to 97mm*84mm*278mm Added: 1. definition of detection limit in specification 2. serial number added to register list	2023.01.15
3	V0.3	1. remove the application of coal mine online monitoring 2. accuracy changed from “5 ppm + 2%reading” to “± (5 ppm + 2%reading)” 3. expression of the sensor’s output type changed from “TTL” to “UART_TTL” for a more accurate definition. 4. Default Baud rate changed from 115200 to 9600	2023.10.18
4	V0.4	Added description of connector and mating terminal.	2023.10.26

TDLAS CH4 Sensor

Gasboard-2502

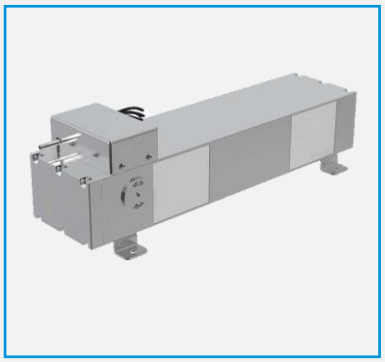

Applications

- Oil and gas well
- Greenhouse gas monitoring

Description

Gasboard-2502 is a high-performance methane gas sensor based on Cubic self-developed Tunable Diode Laser Absorption Spectroscopy (TDLAS) technology. Cubic TDLAS gas sensor contains high performance detector and special processing gas chamber with advantages of high accuracy, high sensitivity, wide working temperature range, long life time and high stable performance etc. With optimized temperature compensation algorithm, the anti-interference performance is excellent, which makes it can work stably at hazardous conditions and complex gas environments.

The sensor is easy to install and maintain as it adopts modalized and low power consumption design and can be calibrated through UART_TTL communication interface.

Features

- 0~1000 ppm measurement range
- Fast response, high accuracy, long life span
- TDLAS technique drive unique methane selectivity, no interference from other gases, water vapor, dust particles
- Low power consumption, modularized design, ease of integration

Working Principle

TDLAS sensor mainly consists of a laser light source, an air chamber and a laser detector, etc. A specified wavelength transmitted by the laser light source will change periodically as the input current being modulated periodically. Scan the wavelength to make the laser output a center wavelength that equals to the absorption peak of the gas to be measured. The gas concentration can be calculated from the spectral intensity signal after absorption.

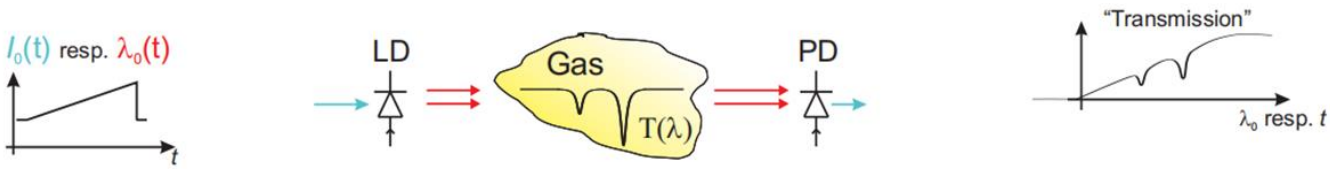

Specifications

Gasboard-2502 Gas Sensor Specification	
Target gas	Methane (CH4)
Working principle	Tunable Diode Laser Absorption Spectroscopy (TDLAS)
Measurement range	0~1000 ppm
Accuracy [1)]	±(5 ppm + 2%reading)
Resolution	0.1 ppm
Detection Limit	1 ppm
Warm-up [2)]	<10s
Working temperature	-20 ~ 60℃(wider temperature range customizable)
Working humidity	0~98%RH (non-condensing)
Working voltage	3.2V~5.5V
Working current	≤100mA (@ 25℃,3.3V)
Output	UART_TTL (3V)
Storage condition	-40 ~ +85℃; 0~98%RH (non-condensing)
Dimension	97mm*84mm*278mm

Note:

1) After zero-point adjustment at normal temperature condition

2) Sensor outputs measured concentration 5 seconds after powered-on, and provides status after warm-up completed.

Product Dimensions

1. Dimensions (Unit: mm)

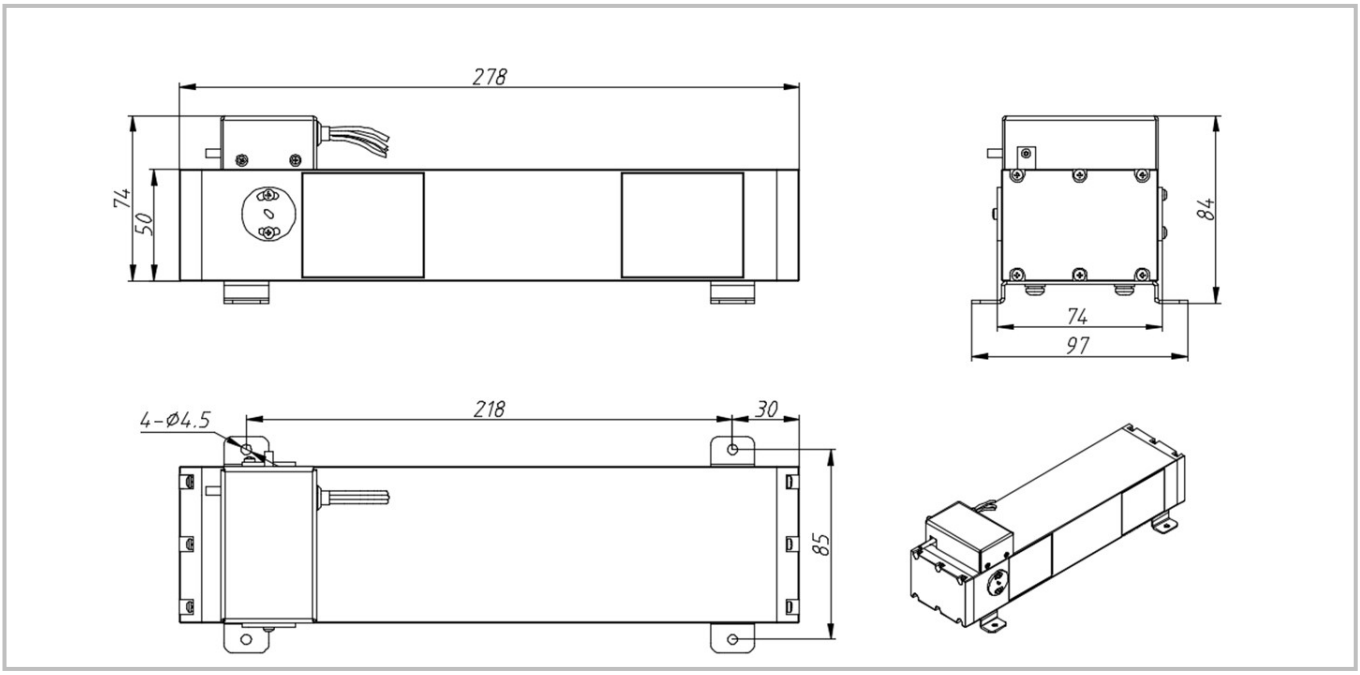

2. Wiring Definition

Pin	Color	Description
1	Red	Power Input(3.2V~5.5V)
2	Black	Power Ground
3	Green	TX(3V)
4	Blue	RX(3V)

3. Connector

Connector	Mating Terminal	Pin Pitch	Manufacturer
HX25012-4Y	HX25013-4A	2.5mm	HongXing Electrical

Precautions

1. During transportation, the sensor is not allowed to be subjected to severe mechanical shock and exposure to the sun and rain, and is strictly prevented from falling, rolling, and heavy pressure;
2. Please read the manual before use to understand the performance and usage, so as to avoid accident or damage to the instrument caused by mis-operations. Avoid large shocks and vibrations, so as not to affect the service life of the sensor;
3. In order to ensure good detection accuracy, the power supply of the sensor must be within the range of technical parameters and use the correct power supply;
4. Before a ventilation and calibration operation, clean stains (include water stains) on the sensor;
5. It is not allowed to disassemble the sensor for maintenance. please contact the manufacturer in time if you encounter problems that cannot be solved.
6. It is forbidden to weld the connection of the sensor's wiring interface when it is powered-on;
7. Make sure that there is no large static electricity (larger than 3000V) remaining on the connected device before the sensor is connected, especially when connecting it to a PC serial port;
8. When testing independently, it is recommended to connect the test adapter.

Communication Protocol

1. Protocol Overview

The communication protocol uses the standard Modbus protocol in Modbus-RTU transmission mode. During the communication process, the sensor is always as a slave, responding to the master command sent by the host. The master communicates with the slave through UART_TTL interfaces. The sensor can be communicated 3 seconds after powered on.

2. Serial Port Settings

Baud rate	Data bit	Stop bit	Parity	Flow control
9600	8	1	None	None

3 Message Frame Format

Device Address	Function Code	Data	Error Check
1 byte	1 byte	N bytes	2 bytes

CH4 sensor's device address is 0xC8 (200 in decimal) by default.

3.1 Function Code

No.	Function Code	Operation	Description
1	0x03	Read data registers	1 register includes 2 bytes
2	0x06	Write data register	1 register includes 2 bytes

3.2 Read Data Registers(0x03)

Request		Response	
Field Name	**(HEX)**	**Field Name**	**(HEX)**
Device Address	01~84 or C8	**Device Address**	01~84 or C8
Function Code	03	**Function Code**	03
Starting Address Hi	00~FF	**Byte Count**	00~FF
Starting Address Lo	00~FF	**Register Value Hi**	00~FF
No. of Registers Hi	00~80	**Register Value Lo**	00~FF
No. of Registers Lo	00~80	**Register Value Hi**	00~FF
CRC Check Lo	00~FF	**Register Value Lo**	00~FF
CRC Check Hi	00~FF	**…**	…
		…	…
		CRC Check Lo	00~FF
		CRC Check Hi	00~FF

Example:

Send: C8 03 00 00 00 07 15 91

Response: C8 03 0E 00 19 07 6B 00 00 03 E8 00 00 00 00 9B 13 66 2A

Explanation: The example above uses universal address 0xC8 (200) to request data from 7 registers (14 bytes) starting from address 0x0000. Response data interpretation as below:

Hex	C8	03	0E	00	19	07	6B	00	00	03	E8	00	00	00	00	9B	13	66	2A
Description				CH4 Conc.		Temp.		Status		Span		Dec. Place		Unit		Light Intensity		CRC-16	
Data interpretation				25 ppm		18.99 ℃		Normal		1000 ppm		0		ppm		39699			

3.3 Write Data Register(0x06)

Request		Response	
Description	**(HEX)**	**Description**	**(HEX)**
Device Address	01~84 or C8	**Device Address**	01~84 or C8
Function Code	06	**Function Code**	06
Register Address Hi	00~FF	**Register Address Hi**	00~FF
Register Address Lo	00~FF	**Register Address Lo**	00~FF
Register Value Hi	00~FF	**Register Value Hi**	00~80
Register Value Lo	00~FF	**Register Value Lo**	00~80
CRC Check Lo	00~FF	**CRC Check Lo**	00~FF
CRC Check Hi	00~FF	**CRC Check Hi**	00~FF

3.4 Exception Responses

An exception code will be returned if the register address or register value is illegal during reading or writing.

Code	Name of the code	Description
01	Illegal function	Function code not exist.
02	Illegal data address	Register address is out of range or the register address and length combination is invalid.
03	Illegal data value	Register value is not an allowable value.

3.5 Detailed Register list

Register Address	Data Type	Bytes	Read/Write	Description
0x00	short	2	R	CH4 Concentration
0x01	short	2	R	Ambient temperature x100, unit: ℃
0x02	unsigned	2	R	Status code
0x03	unsigned	2	R	Span
0x04	unsigned	2	R	Number of decimal places
0x05	unsigned	2	R	Concentration Unit
0x06	unsigned	2	R	Real time light power
0x64	short	2	RW	Zero-point threshold
0x65	short	2	RW	Zero-point calibration
0x66	short	2	RW	Span point calibration
0x67	short	2	W	Reset sensor to factory settings when written 1
0x68	short	2	RW	Perform zero adjustment when written 1
0x69	short	2	RW	Device Address
0x6A	short	2	RW	Baud rate
0x70	short	2	R	Serial Nr. (SN1~SN4): sensor model
0x71	short	2	R	Serial Nr. (SN5~SN8): material number
0x72	short	2	R	Serial Nr. (SN9~SN12): year of production
0x73	short	2	R	Serial Nr. (SN13~SN16): month and date of production
0x74	short	2	R	Serial Nr. (SN17~SN20): 4-digit unique number

Communication Protocol

Note:

1. *Default and universal Modbus device address is 0xC8 (200) which can be used for communication in case the address of the sensor is unknown.*
2. *Device address can be set from 0x01 to 0x84.*
3. *CH4 concentration, span, zero threshold, zero calibration and span calibration are all magnified. The magnification is determined by the number of decimal places. Details See appendix 1.*
4. *Restoring the factory settings will restore the calibration linearity to the factory state.*
5. *Status code see appendix 4.*

Appendix

1. Number of decimal places

Number of decimal places	Description
0	0000, corresponding multiple is 1
1	000.0, corresponding multiple is 10
2	00.00, corresponding multiple is 100
3	0.000, corresponding multiple is 1000

2. Concentration units

Unit	Description
0	ppm
1	mg/m^3
2	%

3. Baud rate

Command	Description
0	Baud rate 9600
1	Baud rate 19200
2	Baud rate 57600
3	Baud rate 115200

4. Status code

Bit	0	1	2	3
Description	Optical path fault	Temperature abnormal	Pressure abnormal	Warming up
Bit	**4**	**5**	**6**	**7**
Description	Temperature over range	Calibration data abnormal	TEC Temperature abnormal	Reserved
Bit	8	9	10	11
Description	Reserved	Reserved	Reserved	Reserved
Bit	12	13	14	15
Description	Reserved	Reserved	Reserved	Reserved

Explanation: The status code is 16-digit hexadecimal data, each 1 digit represents 1 alarm type, 0 means invalid, 1 means valid. There may be multiple states at the same time,

Example: 0x0A corresponds to binary 00000000 00001010, indicating that the sensor is warming up and temperature is abnormal; 0 corresponds to binary 00000000 00000000, indicating normal operation.

Fault description: The optical path failure may be caused by condensation, pollution, and occlusion on the mirror surface. Abnormal temperature and air pressure will lead to abnormal data correction which shall be checked before use. If the temperature exceeds the measuring range, it means that the working temperature exceeds the allowable temperature of the sensor, and the error may have deviation. If the calibration data is abnormal, restore the factory settings and recalibrate. The abnormal TEC temperature indicates that the internal temperature control is abnormal, and it is necessary to check whether the power supply meets the requirements.

Consultancy & After-sales Service

Tel: 86-(0)27-81628827 Fax: 86-(0)27-87401159
Address: Fenghuang No.3 Road, Fenghuang Industrial Park, Eastlake Hi-tech Development Zone, Wuhan, China
Postal Code: 430205
Website: http: //www.gassensor.com.cn
E-mail: info@gassensor.com.cn